Inside pinholder

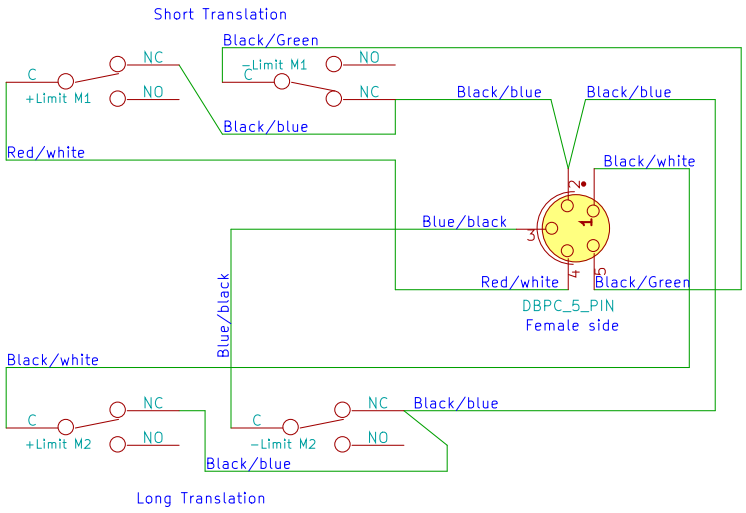

Motor flange

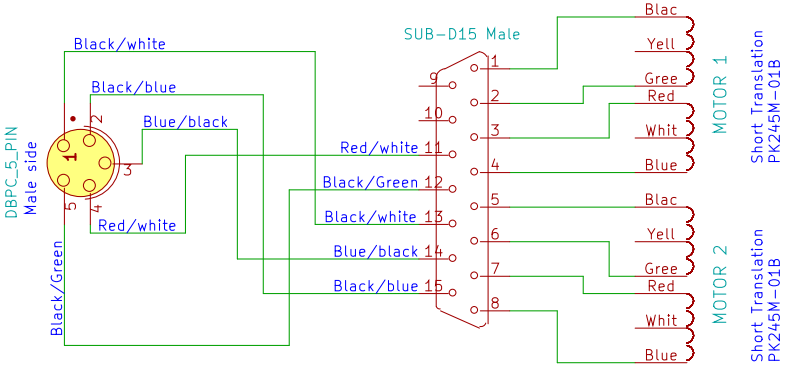

JJ X-Ray Michael Andersen		
File: Pinhole_Aperture_17054.sch		
Sheet: /		
Title: Pinhole_Aperture_17054		
Size: A4	Date: 21 sep 2017	**Rev: 1.0**
KiCad E.D.A. eeschema (2013-05-16 BZR 4016)-stable		Id: 1/1